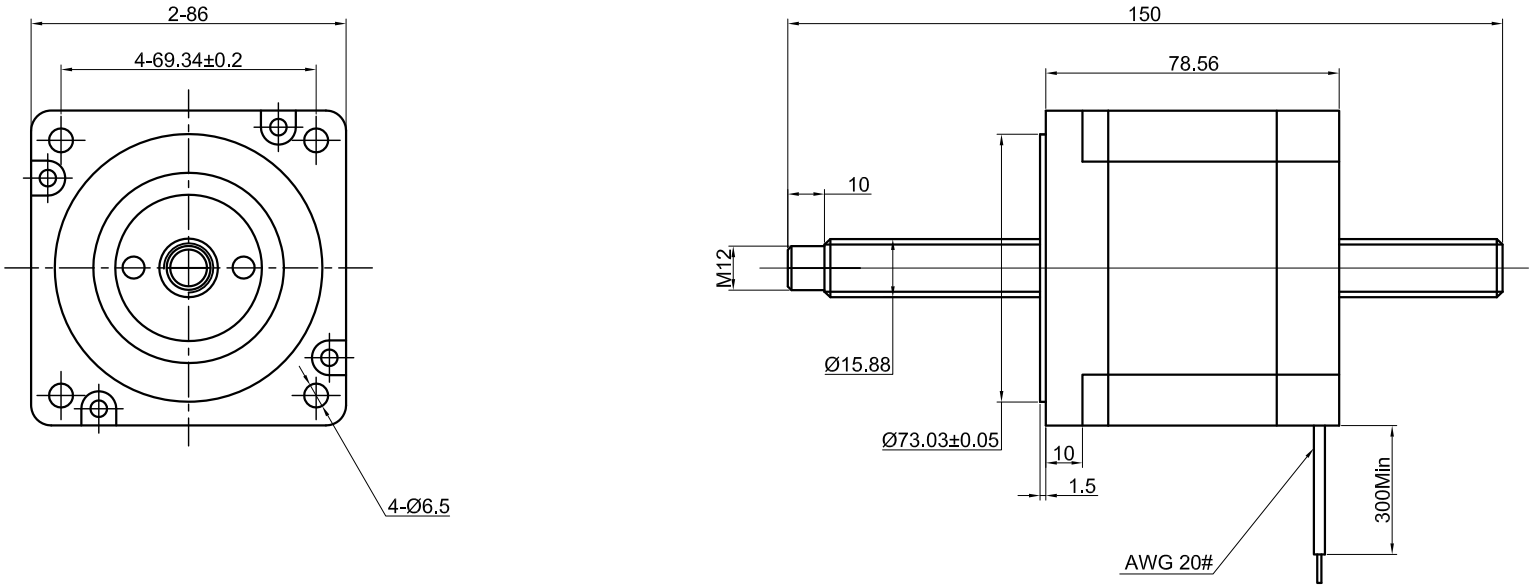


| SPECIFICATION / CONNECTION | BIPOLAR |
|---|---|
| VOTAGE(VOC) | 5.00 |
| AMPS/PHASE | 3.12 |
| RESISTANCE/PHASE(Ohms)@25°C | 1.60±10% |
| INDUCTANCE/PHASE(mH)@1KHz | 8.80±20% |
| MINIMAL THRUST(N)@300 PPS | 1000.00 |
| LEAD(mm) | 2.54 |
| LINEAR TRAVEL/STEP(mm) | 0.0127 |
| STEP ANGLE(°) | 1.80 |
| STEP ACCURACY(NON-ACCUM) | ±5.00% |
| LEAD TYPE | AWG 20 |

TEMPERATURE RISE:MAX.80°C（MOTOR STANDSTILL;FOR 2PHASE ENERGIZED）

AMBIENT TEMPERATURE -10°C~50°C[14°F~122°F]

INSULATION RESISTANCE 100 Mohm（UNDER NORMAL TEMPERATURE AND HUMIDITY）

INSULATION CLASS B 130°C[266°F]

DIELECTRIC STRENGTH 500VAC FOR 1MIN.(BETWEEN THE MOTOR COILS AND THE MOTOR CASE )

AMBIENT HUMIDITY MAX.85%(NO CONDENSATION)

| TYPE OF CONNECTION (EXTERN) | | MOTOR | |
|---|---|---|---|
| PIN NO | BIPOLAR | LEADS | WINDING |
| 1 | A — | RED | A |
| 2 | A\ — | RED/WHT | A\ |
| 3 | B — | GRN/WHT | B |
| 4 | B\ — | GRN | B\ |

FULL STEP 2 PHASE-Ex. ,
WHEN FACING MOUNTING END (X)

| STEP | A | B | A\ | B\ | | CCW |
|---|---|---|---|---|---|---|
| 1 | + | + | - | - | ↓ | ↑ |
| 2 | - | + | + | - | | |
| 3 | - | - | + | + | | |
| 4 | + | - | - | + | CW | |

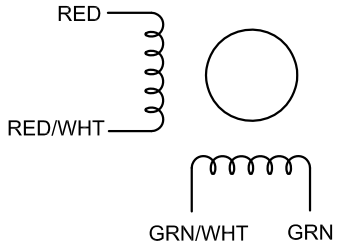


| | | | | |
|---|---|---|---|---|
| OY STEPPER www.oyostepper.com | | APVD | | STEPPER MOTOR |
| | | CHKD | | |
| | 1:2 | DRN | | 34LS31-31243-150N |
| | SCALE | SIGNATURE | DATE | |